avigilon™
a Motorola Solutions Company

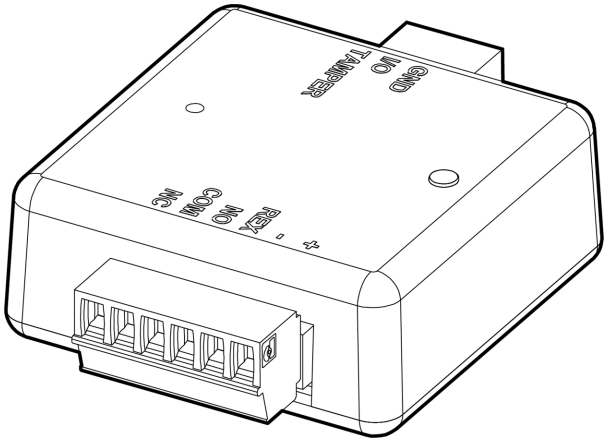

Installation Guide

Avigilon Safety Relay for Video Intercom:

H4VI-AC-RELY1

Important Safety Information

This manual provides installation and operation information and precautions for the use of this device. Incorrect installation could cause an unexpected fault. Before installing this equipment read this manual carefully. Please provide this manual to the owner of the equipment for future reference.

This Warning symbol indicates the presence of dangerous voltage within and outside the product enclosure that may result in a risk of electric shock, serious injury or death to persons if proper precautions are not followed.

This Caution symbol alerts the user to the presence of hazards that may cause minor or moderate injury to persons, damage to property or damage to the product itself if proper precautions are not followed.

WARNING — Failure to observe the following instructions may result in severe injury or death.

- Installation must be performed by qualified personnel only.
- Installation of the device must conform to all local codes.
- The Safety Relay product power source must be a 12V DC or 24V DC AC-to-DC power supply.
- Do not connect directly to a mains power system for any reason.

CAUTION — Failure to observe the following instructions may result in injury to persons or damage to the device.

- Do not install near any heat sources such as radiators, heat registers, stoves, or other sources of heat.
- Do not subject the device cables to excessive stress, heavy loads or pinching.
- Do not open or disassemble the device. There are no user serviceable parts.
- Refer all device servicing to qualified personnel. Servicing may be required when the device has been damaged (such as from a liquid spill or fallen objects), has been exposed to rain or moisture, does not operate normally, or has been dropped.
- Do not use strong or abrasive detergents when cleaning the device body.
- Use only accessories recommended by Avigilon.
- This product should be installed in restricted access locations.

Regulatory Notices

This device complies with part 15 of the FCC Rules. Operation is subject to the following two conditions: (1) This device may not cause harmful interference, and (2) this device must accept any interference received, including interference that may cause undesired operation.

This Class A digital apparatus complies with Canadian ICES-003.

FCC Notice

This equipment has been tested and found to comply with the limits for a Class A digital device, pursuant to Part 15 of the FCC rules. These limits are designed to provide reasonable protection against harmful interference when the equipment is operated in a commercial environment. This equipment generates, uses and can radiate radio frequency energy and, if not installed and used in accordance with the instruction manual, may cause harmful interference to radio communications. Operation of this equipment in a residential area is likely to cause harmful interference in which case the user will be required to correct the interference at his own expense.

Changes or modifications made to this equipment not expressly approved by Avigilon Corporation or parties authorized by Avigilon Corporation could void the user's authority to operate this equipment.

Disposal and Recycling Information

When this product has reached the end of its useful life, please dispose of it according to your local environmental laws and guidelines.

Risk of fire, explosion, and burns. Do not disassemble, crush, heat above 100 °C (212 °F), or incinerate.

European Union:

This symbol means that according to local laws and regulations your product should be disposed of separately from household waste. When this product reaches its end of life, take it to a collection point designated by local authorities. Some collection points accept products for free. The separate collection and recycling of your product at the time of disposal will help conserve natural resources and ensure that it is recycled in a manner that protects human health and the environment.

Legal Notices

Disclaimer

This document has been compiled and published using product descriptions and specifications available at the time of publication. The contents of this document and the specifications of the products discussed herein are subject to change without notice. Avigilon Corporation reserves the right to make any such changes without notice. Neither Avigilon Corporation nor any of its affiliated companies: (1) guarantees the completeness or

Avigilon Corporation
avigilon.com

PDF-VI_SR-A

Revision: 2 - EN

20180912

Table of Contents

Introduction

The Safety Relay enhances the security of doors controlled by the Video Intercom by ignoring door open requests from a compromised Video Intercom. Installed on the secure side of the door, the Safety Relay can be placed in most standard installation boxes and control the electric door strike or connect to an AvigilonAccess Control Manager (ACM) system for door control. When the Video Intercom detects tampering, the Safety Relay persists a lockout mode and keeps the door securely locked, only permitting exit from the secure side. After a lockout, the clear button on the Safety Relay must be pressed to restore normal operation.

This guide provides instructions for the installation of the Safety Relay on the secured side of an entrance.

Overview

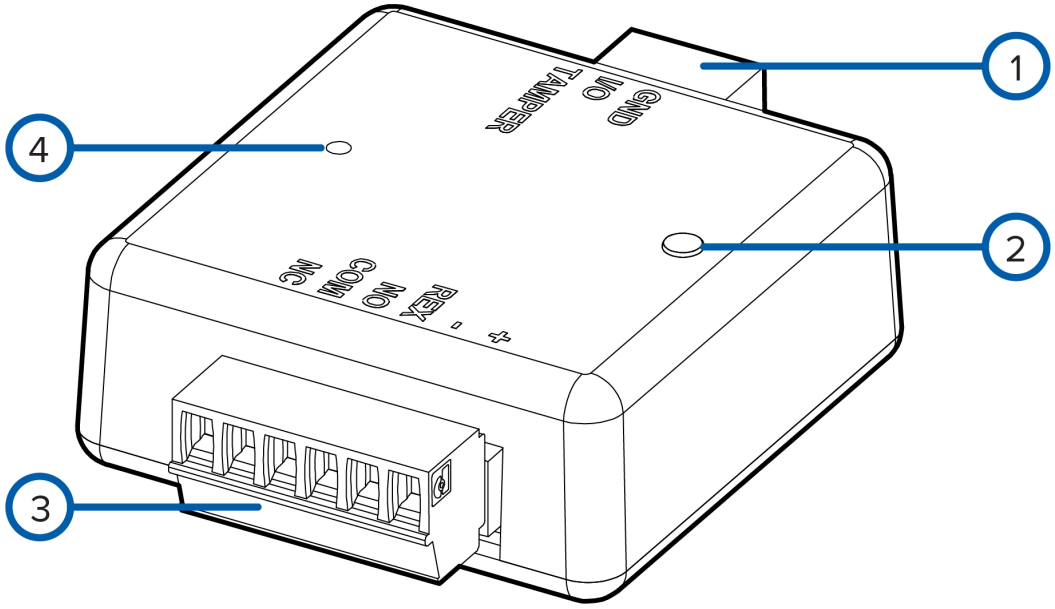

1. **Input Terminal Block**

   3-contact pluggable terminal block for inputs from Video Intercom.

2. **LED Indicator**

   Provides information about device operation. For more information, see *LED Status Indicators* on page 11

3. **Output Terminal Block**

   6-contact pluggable terminal block for outputs and for DC power supply to the Safety Relay.

   NOTE: Contacts are rated for 24V, 2A maximum, and 16 to 26 AWG wires.

4. **Clear Button**

   Clears the device tampered state.

Installation

Install the Safety Relay in a vandal-resistant electrical lock-box on the secure side of the door to ensure no unauthorized access.

Wires should also be routed to this electrical lock-box to connect the:

- Video Intercom outputs to the Safety Relay inputs.
- Safety Relay outputs to the door lock or door controller.
- Exit request reader on the secure side of the door.

Package Contents

Ensure the package contains the following:

- Avigilon Safety Relay for the Video Intercom

No wires or fasteners are provided.

An electrical lock-box provided with a suitable AC-to-DC power supply, with wiring from the digital outputs of the Video Intercom, the REX device, and the door lock must already be present.

How the Safety Relay Works

The Safety Relay is powered by a DC power source, and is placed on the secured side of a door. It connects to the Video Intercom, which is installed on the unsecured side of the entrance. This device can be used to control the entrance strike via a digital output or a controller panel. The Safety Relay can also be connected to a request-to-exit (REX) sensor on the secured side of the door.

The Safety Relay receives inputs from:

- The Video Intercom when:
    - An access grant has been issued by the operator to unlock the door.
    - Someone physically tampers with the Video Intercom, to put the door into the tampered (lock-out) state. (Optionally, the Video Intercom can be configured to put the door into lock-out state when video tampering is detected.)
- The REX sensor on the secured side when someone swipes their badge or enters their code to exit, to unlock the door.

When these inputs are received, the Safety Relay outputs a signal to generate the appropriate action by the door lock. In the lockout state, the unlock request signal from the Video Intercom is ignored so the Video Intercom can no longer be used to unlock the door while the REX input remains unaffected and can be used to unlock the door from the secured side. After the Safety Relay is in the tampered state, the normal door state can only be restored by manually resetting the Safety Relay.

The Safety Relay has non-volatile memory so the current door state (normal or locked-out) is preserved across power cycles.

Use the following guidelines to plan the connection of the Safety Relay to your existing security access infrastructure:

- The power source must be a 12V DC or 24V DC AC-to-DC power supply. The Safety Relay requires 1W to operate, excluding all external devices like door latches and REX sensors.
- Wiring from the Video Intercom device, the AC-to-DC power supply, the REX sensor, and the door lock or door latch device should already be in place.

  See *Installing the Safety Relay* on the next page for the wiring details for fail-secure and fail-safe door locks, and for integrating a Video Intercom with the Safety Relay for tamper detection into a site where an ACM appliance is connected to your ACC System.

- The door lock or door latch device must be connected such that current flows IN through the NC or NO input, and OUT through the COM terminal. This current flow direction is needed for the contact protection circuit to be effective.
- When you are connecting a Safety Relay to a door lock, a freewheel diode, 60V (greater than 1 amp), must be installed at the lock device to prevent high-voltage inductive kick-back voltages when the relay contacts open. Failure to do so can significantly decrease relay contact lifetime and increase electro-magnetic emissions from the system.

NOTE: Make sure the wires are carefully tucked into the electrical lock-box and are not pinched.

Installing the Safety Relay

To install the Safety Relay:

1. Install a freewheel diode, 60V (greater than 1 amp), at the lock device.
2. Wire the Safety Relay to the Video Intercom and the door strike depending on how the door is configured:
    - **Fail-secure**: Refer to *Wiring for a Fail-Secure Configuration* on the next page.
    - **Fail-safe**: Refer to *Wiring for a Fail-Safe Configuration* on page 7.

Wiring the Safety Relay

The contacts on the pluggable terminal blocks are are rated for 24V, 2A maximum, and 16 to 26 gauge wires.

You can wire the Safety Relay to an electric door strike directly or to a door controller panel managed by the ACM software.

There are two ways to directly wire the Safety Relay to an electric door strike, depending on how the door is configured to act when power is cut off:

1. **Fail-secure**: The door is locked from the outside, and is unlocked from the inside to permit exit or evacuation.
2. **Fail-safe**: The door is unlocked allowing people to enter and exit freely.

Electric door strikes can be configured either way. Magnetic door locks can only be in fail-safe mode when power is cut off.

The Safety to Relay can be connected to a door managed by the ACM system. The diagram (see *Wiring for a Door Already Managed by an ACM System* on page 8) shows the connections for the Fail-Secure door. For a Fail-Safe door, the door lock connects to the Safety Relay's NC terminal. The REX sensor is connected to the ACM system input so the ACM system can log REX events. An ACM output is used to drive the Safety Relay's REX input so that ACM can unlock the door even if the Safety Relay is in the lockout state.

Tip: These connections will not allow the ACM system to log door unlock events granted by the Video Intercom, but these events could be logged by the ACC system. To log Video Intercom-initiated door unlocks in the ACM system, another ACM input could be used to monitor the NC or NO signal, which would generate an ACM event for both ACM and Video Intercom initiated door unlocks.

Wiring for a Fail-Secure Configuration

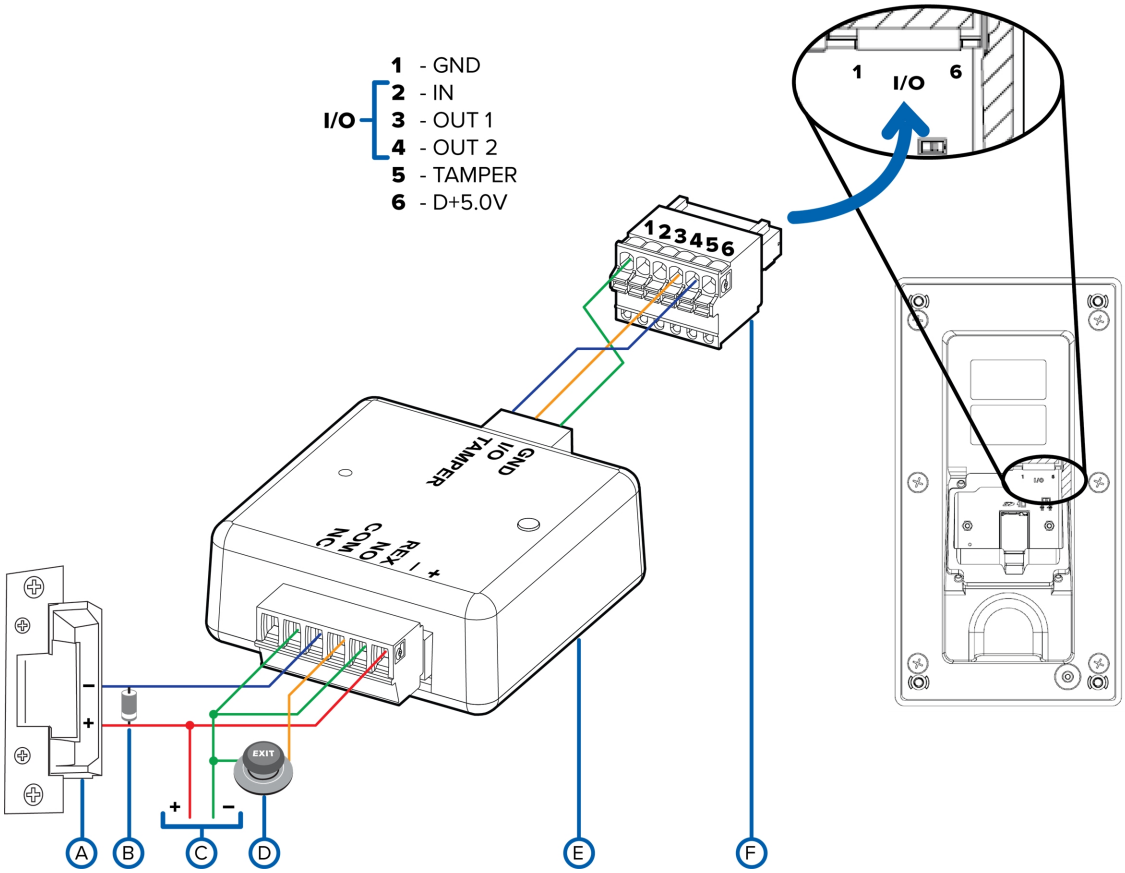

Wiring

1. GND connects to input 1 on the digital I/O pin connector of the Video Intercom.
2. I/O connects to input 4 on the digital I/O pin connector of the Video Intercom.
3. TAMPER connects to input 5 on the digital I/O pin connector of the Video Intercom.
4. COM connects to the – terminal on the safety relay, the REX sensor, and to the – terminal on the power supply.
5. NO connects to the – terminal on the door strike.
6. REX connects to the REX sensor.
7. + connects to the + terminals on the power supply and the door strike.

Parts

A. Door strike
B. 60V freewheel diode (cathode is connected to the + wire, and anode is connected to the – wire)
C. Power supply
D. REX sensor
E. Safety Relay
F. Digital I/O pin connector of the Video Intercom

Wiring for a Fail-Safe Configuration

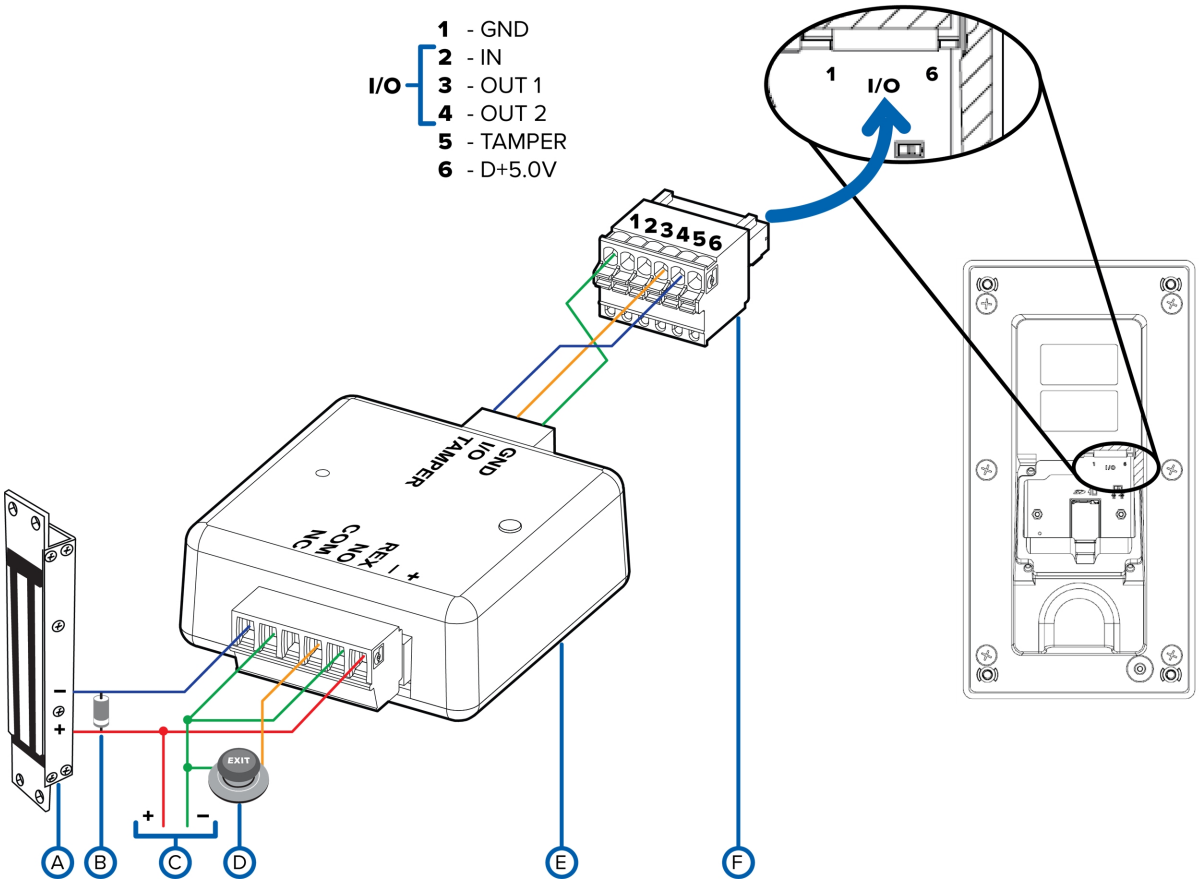

Wiring

1. GND connects to input 1 on the digital I/O pin connector of the Video Intercom.
2. I/O connects to input 4 on the digital I/O pin connector of the Video Intercom.
3. TAMPER connects to input 5 on the digital I/O pin connector of the Video Intercom.
4. NC connects to the – terminal on the magnetic lock.
5. COM connects to the – terminal on the safety relay, the REX sensor, and to the – terminal on the power supply.
6. REX connects to the REX sensor.
7. + connects to the + terminals on the power supply and the magnetic lock.

Parts

A. Magnetic lock
B. 60V freewheel diode (cathode is connected to the + wire, and anode is connected to the – wire)
C. Power supply
D. REX sensor
E. Safety Relay
F. Digital I/O pin connector of the Video Intercom

Wiring for a Door Already Managed by an ACM System

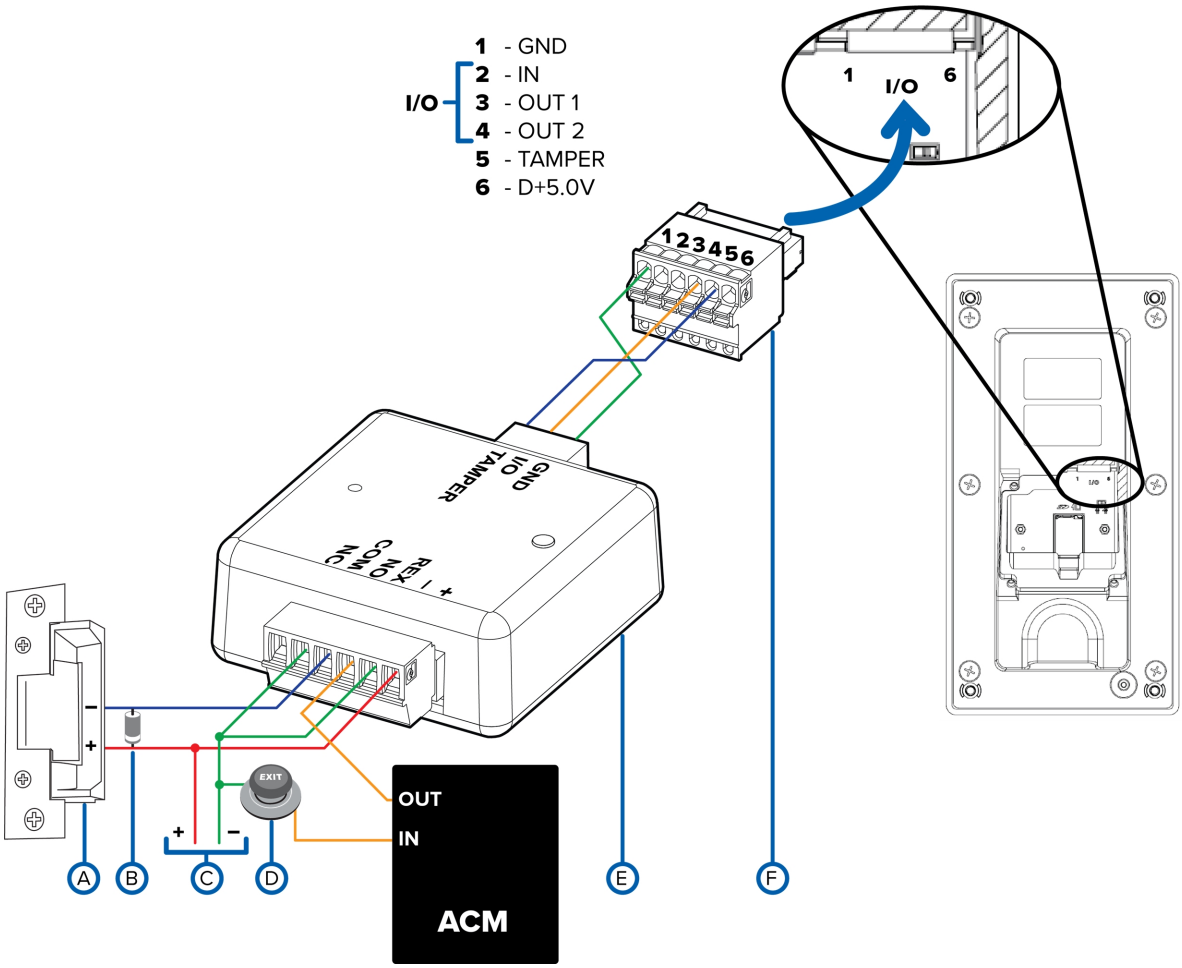

Wiring

1. GND connects to input 1 on the digital I/O pin connector of the Video Intercom.
2. I/O connects to input 4 on the digital I/O pin connector of the Video Intercom.
3. TAMPER connects to input 5 on the digital I/O pin connector of the Video Intercom.
4. COM connects to the – terminal on the safety relay, the REX sensor, and to the – terminal on the power supply.
5. NO connects to the – terminal on the door strike.
6. REX connects to the output for REX signals on the door controller managed by the ACM system (and the REX sensor is connected to an input terminal on the door controller).
7. + connects to the + terminals on the power supply and the door strike.

Parts

A. Door strike
B. 60V freewheel diode (cathode is connected to the + wire, and anode is connected to the – wire)
C. Power supply

D. REX sensor
E. Safety Relay
F. Digital I/O pin connector of the Video Intercom

Power Loss to the Safety Relay

When power is cut off to the Safety Relay only, the door will return to its normal mode, but requests from the Video Intercom to grant access do not get processed. When power is restored the Safety Relay returns to its last known state before the power loss. If the Safety Relay was in the lockout state before power was cut off, it returns to the lockout state. If it was in its normal state, it returns to the normal state.

LED Status Indicators

The Safety Relay state is shown by its LED.

LED	Status
Green	Functioning normally, door latch is locked.
Blinking Green	Functioning normally, door latch is unlocked (relay is activated).
Red	Tampering detected, door is locked-out to ignore door open requests from the Video Intercom (on the I/O pin) to prevent entrance, but input from REX sensor can still unlock door to allow exit.

When the LED is steady red, the tampered state can only be cleared by pushing the clear button on the Safety Relay. The tampered state should only be cleared after the tampering incident has been resolved.

Clearing the Door Tampered State

After the tampering event has been resolved, you can clear the tampered state on the Safety Relay. Clear the Safety Relay only when it is in the tampered state and the LED is a steady red.

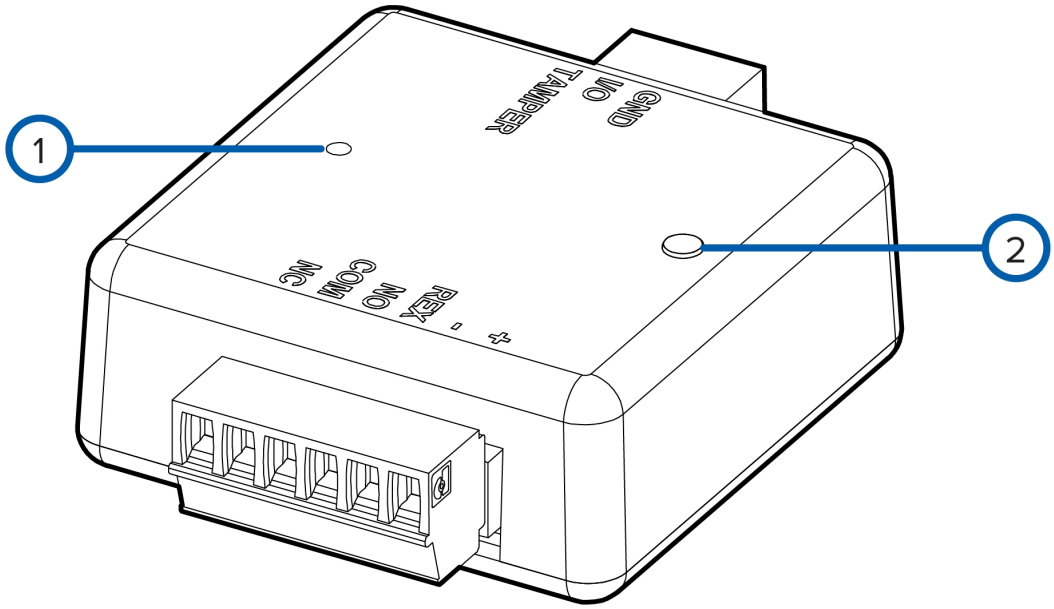

Use the clear button (1) on the Safety Relay in the tampered state to restore it to the normal door state:

1. Ensure there is power to the junction box where the Safety Relay is installed.
2. Open the secured junction box.
3. Locate the Safety Relay and ensure the LED is a steady red (2).
4. Locate the clear button.
5. Using a straightened paperclip or similar tool, gently press and hold the clear button.
6. Release the button after three seconds.

CAUTION — Do not apply excessive force. Inserting the tool too far will damage the Safety Relay.

Limited Warranty and Technical Support

Avigilon warranty terms for this product are provided at **avigilon.com/warranty**.

Warranty service and technical support can be obtained by contacting Avigilon Technical Support: **avigilon.com/contact-us/**.